Installation Switches
BZM Series Explosion-proof Illumination Switches

- Explosion protection to
  - -CENELEC
  - -IEC
  - -NEC
- Can be used in
  - Zone 1 and Zone 2
  - Zone 21 and Zone 22
  - Class I, Zone 1 and Zone 2
  - Class I, Division 1, Groups A, B, C, D
- Copper-free aluminium enclosure, powder coated surface.
- Two options:
  - -On-off switch
  - -Changeover switch

Catalogue number logic

BZM - □ □

- Switch type (B: on-off switch D: changeover switch)
- Rated current (A)
- Explosion-proof illumination switches

Selection table

Type/Ordering code	Chart of contact	Corresponding switch	Weight (kg)
BZM-16B	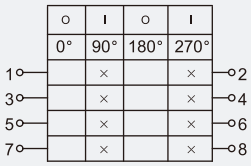	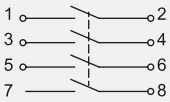	0.85
BZM-25B			0.95
BZM-16D	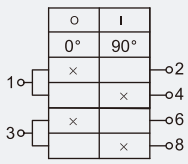	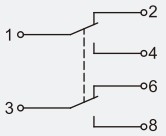	0.85
BZM-25D			0.95

Zones 1&2; 21&22

Technical data

Explosion-proof illumination switches BZM-□□

Explosion protection	
Gas explosion protection	Ex II 2 G Ex d IIC T6 Gb
Dust explosion protection	Ex II 2 D Ex tb IIIC T80℃ Db IP66
Certificates	LCIE 06 ATEX 6068; IECEx LCI 08. 0008
Conformity to standards	EN 60079-0:2012, EN 60079-1:2007, EN 60079-31:2009
	IEC 60079-0:2011, IEC 60079-1:2007, IEC 60079-31:2008
Enclosure material	Copper-free aluminium, powder coated surface
Enclosure colour	Window grey (RAL7040)
Switch function	On-off switch or changeover switch
Exposed fastener	Stainless steel
Rated voltage	Max. 250V AC
Rated current	16A, 25A
Degree of protection	IP66, IP67 (optional)
Ambient temperature	-60℃~+60℃
Cable connection	3 x (2.5~4)mm^2
Cable entries	Standard 2 x M25 x 1.5 plugs
	2 x G3/4" plugs or 2 x NPT3/4" plugs on request
Cable gland(optional)	DQM-II (Ex d) or DQM-III (Ex d) is recommended. Please see P7/20~27.

Spare parts

Built-in switch	Rated voltage/current	Ordering code	Weight (kg)
	250V/16A	30001	0.10
	250V/25A	30002	0.20
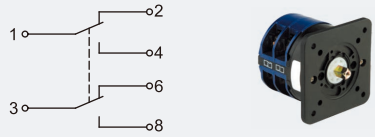	250V/16A	30003	0.10
	250V/25A	30004	0.20
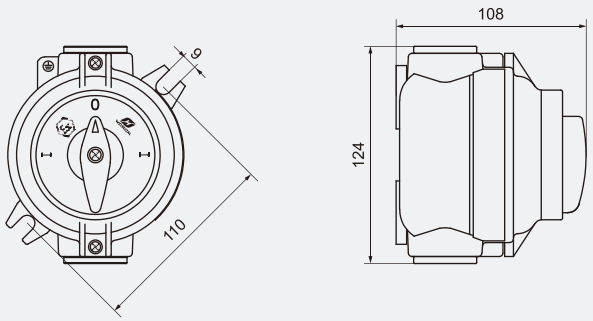
Dimension drawings (all dimensions in mm) - subject to alteration